REVISIONS			
REV	DESCRIPTION	DATE	APPROVED
XX	XXXXXXXXXXXXXXXXXXXXXXXXXXXXXXXXXXXXXXXX	MO/DY/YR	XXX

.038 MIN IF U-SHAPE
.027 MIN IF TUBULAR

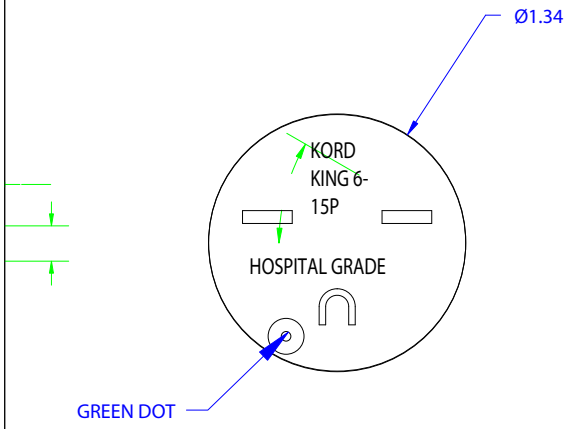

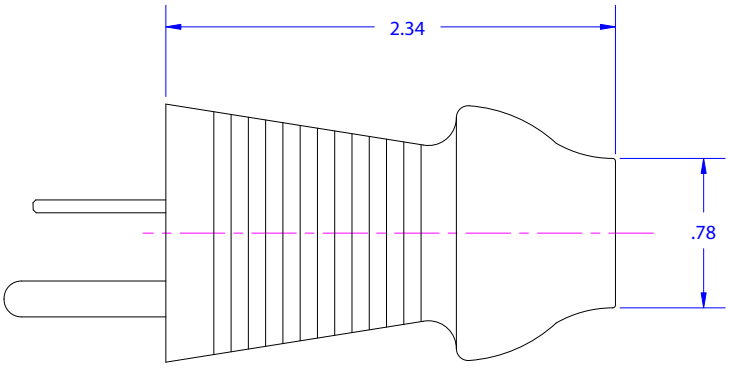

PROPRIETARY INFORMATION
KORD KING, INC.
ALL RIGHTS RESERVED

THIS DOCUMENT CONTAINS CONFIDENTIAL AND PROPRIETARY INFORMATION OF KORD KING AND IT'S RECEIPT OR POSSESSION DOES NOT CONVEY ANY RIGHTS TO REPRODUCE, DISCLOSE IT'S CONTENTS, OR TO MANUFACTURE, USE OR SELL ANYTHING IT MAY DESCRIBE. REPRODUCTION, DISCLOSURE, OR USE WITHOUT SPECIFIC WRITTEN AUTHORIZATION OF KORD KING IS STRICTLY FORBIDDEN.

TOLERANCES
FRACTIONAL ± 1/8
2 PLACE DEC. ± 0.060
3 PLACE DEC. ± 0.030

MATERIAL SPEC
PLUG: PVC

KORD KING, INC.

PLUG, HOSPITAL
NEMA 6-15P

SIZE	FSCM NO.	DWG NO.	REV
A		KK13000-6-15	XX

SCALE	NONE	DRAWN BY: NICK B DATE DWN: 01/28/05	SHEET	1 OF 1