| REVISIONS | | | |
|---|---|---|---|
| REV | DESCRIPTION | DATE | APPROVED |
| XX | XXXXXXXXXXXXXXXXXXXXXXXXXXXXXXXXXXXXXXXX | MO/DY/YR | XXX |

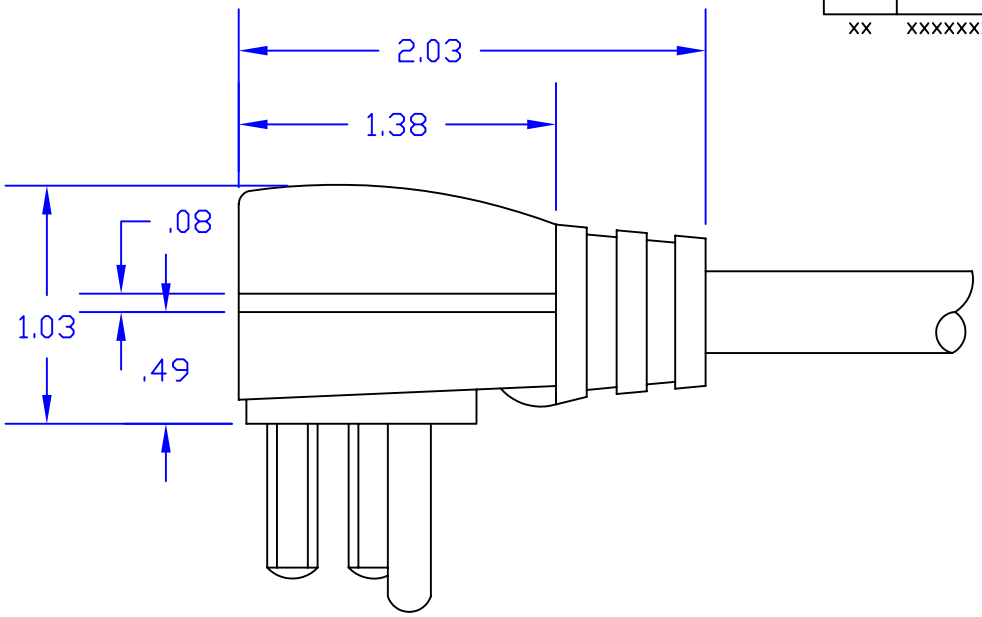


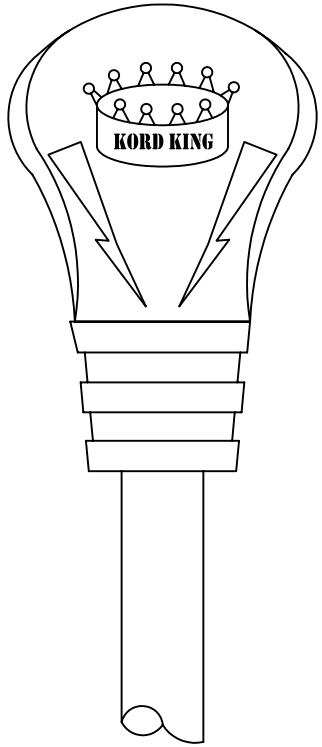


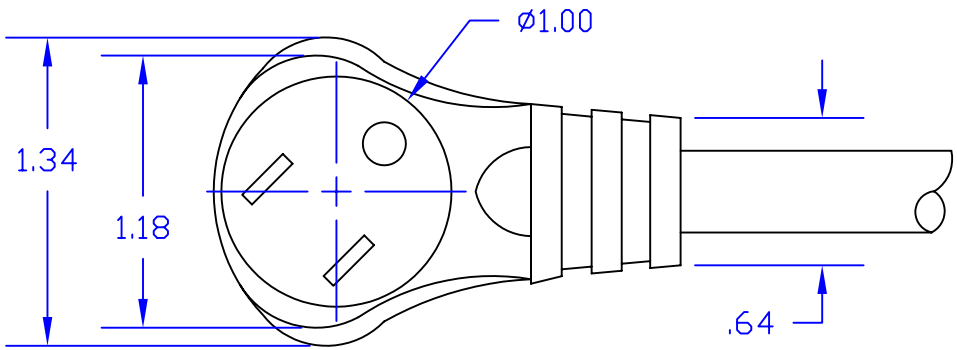


PROPRIETARY INFORMATION
KORD KING, INC.
ALL RIGHTS RESERVED
THIS DOCUMENT CONTAINS CONFIDENTIAL AND PROPRIETARY INFORMATION OF KORD KING AND IT'S RECEIPT OR POSSESSION DOES NOT CONVEY ANY RIGHTS TO REPRODUCE, DISCLOSE IT'S CONTENTS, OR TO MANUFACTURE, USE OR SELL ANYTHING IT MAY DESCRIBE. REPRODUCTION, DISCLOSURE, OR USE WITHOUT SPECIFIC WRITTEN AUTHORIZATION OF KORD KING IS STRICTLY FORBIDDEN.

TOLERANCES
AS NOTED

MATERIAL SPEC

# KORD KING, INC.

5–15 RA 135°
PLUG

| SIZE | FSCM NO. | DWG NO. | REV |
|---|---|---|---|
| A | | KK19000–ORA–135 | XX |
| SCALE NONE | DRAWN BY: NICK<br>DATE DWN: 5/18/05 | SHEET 1 OF 1 | |