| REVISIONS | | | |
|---|---|---|---|
| REV | DESCRIPTION | DATE | APPROVED |
| XX | XXXXXXXXXXXXXXXXXXXXXXXXXXXXXXXXXXXXXXXX | MO/DY/YR | XXX |

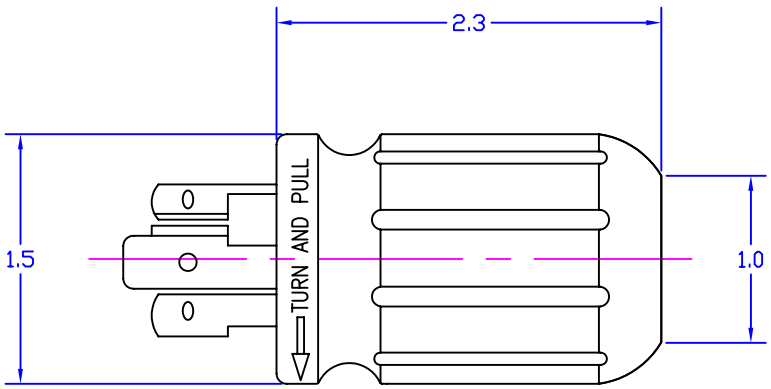


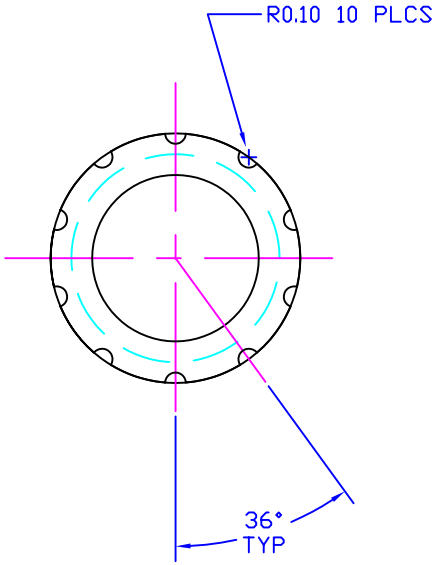


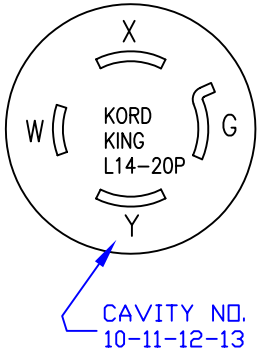


PLUG FACE


PROPRIETARY INFORMATION
KORD KING, INC.
ALL RIGHTS RESERVED
THIS DOCUMENT CONTAINS CONFIDENTIAL AND PROPRIETARY INFORMATION OF KORD KING AND IT'S RECEIPT OR POSSESSION DOES NOT CONVEY ANY RIGHTS TO REPRODUCE, DISCLOSE IT'S CONTENTS, OR TO MANUFACTURE, USE OR SELL ANYTHING IT MAY DESCRIBE. REPRODUCTION, DISCLOSURE, OR USE WITHOUT SPECIFIC WRITTEN AUTHORIZATION OF KORD KING IS STRICTLY FORBIDDEN.


TOLERANCES

MATERIAL SPEC

MAT'L: PVC

# KORD KING, INC.

TWISTLOCK PLUG
L14-20P

| SIZE | FSCM NO. | DWG NO. | REV |
|---|---|---|---|
| A | | KKL1420P | XX |

| SCALE | NONE | DRAWN BY: NDB<br>DATE DWN: 3/13/09 | SHEET | 1 OF 1 |
|---|---|---|---|---|